GENERAL DATASHEET
VARIABLE SPEED DRIVE

SERIES	MODEL#
F510	F510-2015-C3-UE
ISSUED	ENCLOSURE/ FRAME
12/31/2019	NEMA 1 (IP20) / F3

INPUT AMPS		AC INPUT VOLTAGE	AC INPUT FREQUENCY	AC INPUT PHASE
ND (VT)				
41.7		200-240	50/60	3
OUTPUT HP	OUTPUT AMPS	AC OUTPUT VOLTAGE	AC OUTPUT FREQUENCY	AC OUTPUT PHASE
ND (VT)	ND (VT)			
15	40	0-240	0-400	3

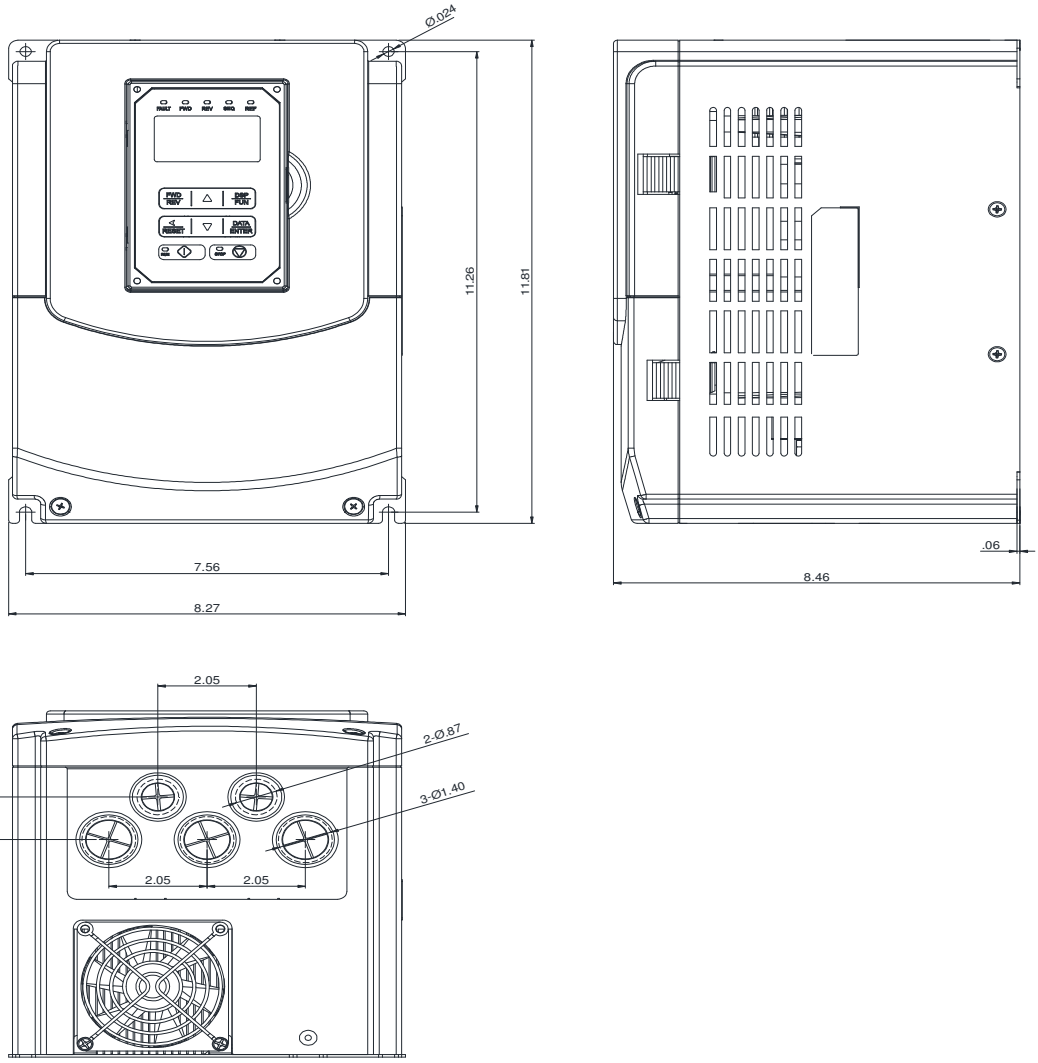

Approved By:	Brian Smith	Drawing No:	F510-230-015-F3	Revision: 1